Accessories

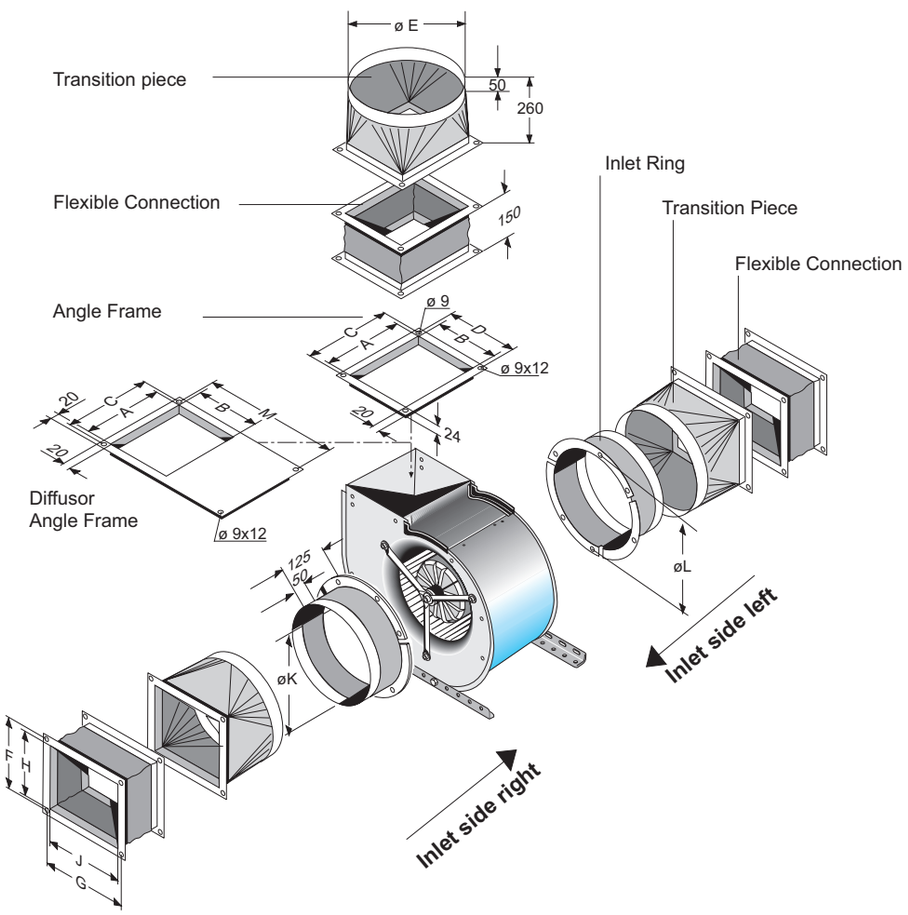
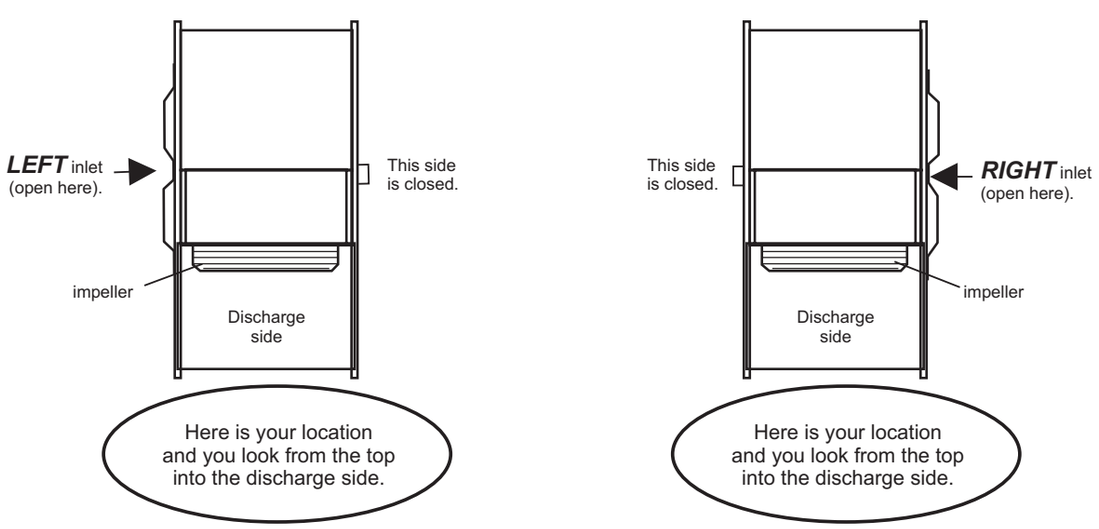
Setting of the inlet side on single inlet fans