Type: D = Double Inlet

Performance / Dimensions

FISCHBACH COMPACT FAN

Type: D 540/E 25 [230V 1N~ 50 Hz]

MP Capacitor 20 µF - 400 VDB
Protection type: IP 65

For sound data please see extra pages.

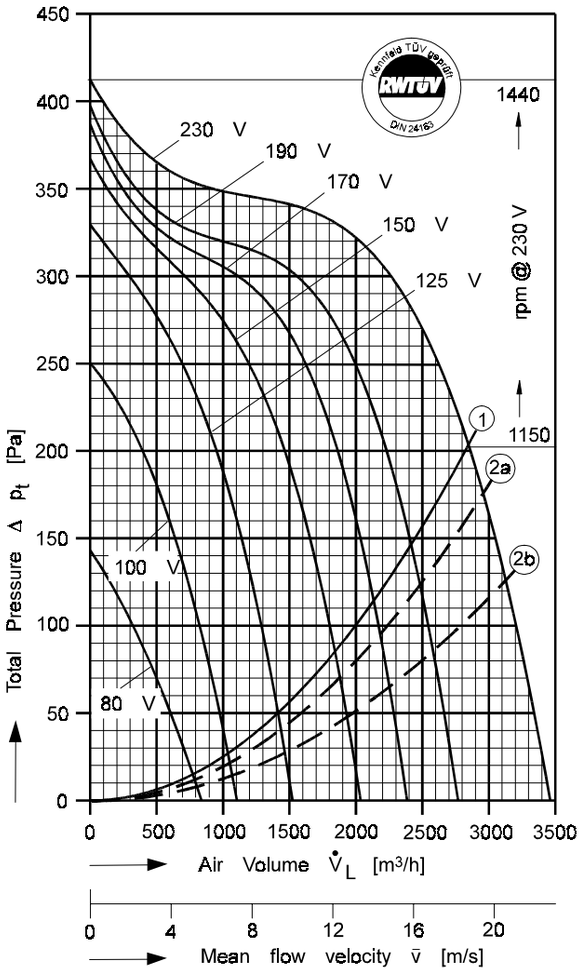

Voltage [V]	Air Volume $\dot{V}_L$ [m³/h] @ ρ = 1,2 kg/m³ *and Current [A] (bold figures, 2nd. line)*							
	Free Air	Total Current Δ p_t [Pa]						
		50	100	150	200	250	300	350
80	775 **1,73**	605 **1,66**	320 **1,58**					
100	1020 **2,15**	975 **2,10**	825 **1,95**	640 **1,80**	395 **1,66**			
125	1400 **2,63**		1290 **2,47**	1140 **2,27**	950 **2,03**	695 **1,77**	295 **1,51**	
150	1810 **3,05**		1805 **3,00**	1655 **2,76**	1465 **2,49**	1195 **2,16**	715 **1,74**	130 **1,49**
170	2125 **3,29**			2035 **3,13**	1865 **2,87**	1620 **2,54**	1115 **2,03**	245 **1,57**
190	2395 **3,41**				2230 **3,18**	1995 **2,89**	1555 **2,43**	345 **1,68**
230	2840 **3,71**					2620 **3,44**	2265 **3,10**	920 **2,27**

Save power and even more silent with
FISCHBACH SPEED CONTROLLERS
FISCHBACH AUTOMATIC CONTROLLERS

Voltage Control	Type*	**Order-No.***
Stepless, 0 - 100% and 100% - 0	FDR 55	**6163**
Stepwise, 7 Steps	FDR 420	**6201**
FISCHBACH AUTOMATIC CONTROL**	FRA 55	**6252**

* For further details see resp. catalogue pages
** For details of sensors etc., on request

P_{max} = 0,77 kW I_A / I_N = 1,7 I_{max} = 3,71 A

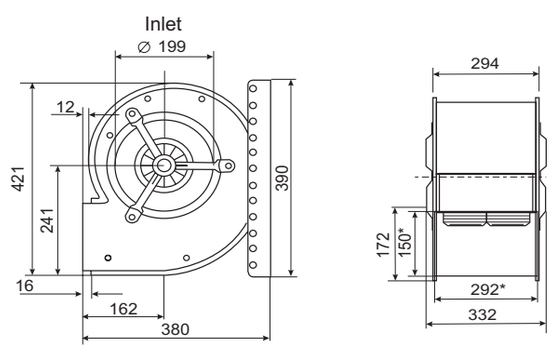

* External dimension of discharge

(1) **System curve for dynamical pressure part related to fan discharge surface of 0,0422 m². For operating points above that curve a max. air temperature of 60° C ist allowed (Curve for free blowing fan).**

(2a) **System curve incl. pressure regain by means of TRANSITION PIECE (square to round, FISCHBACH accessory) with connected duct. Duct length: 0,4 m.**

(2b) **System curve incl. pressure regain by means of DIFFUSER ANGLE FRAME (FISCHBACH accessory) with connected duct. Duct length: 2,9 m.**

The Silent One

In the above diagram the *TOTAL* pressure (the sum of the dynamic and static pressures) is shown in relation to the air volume, dynamic pressure is shown below system line No.1. Static pressure is shown above that line.

To regain static pressure and reduce dynamic pressure connect a suitable transition piece on the fan outlet.